PROCESS BARGRAPH INDICATOR AND ALARM MONITOR
Model JC-10D

High Visibility Bargraph and Numeric Display
- 4 Digit Numeric Display
- 200 Segment Bargraph
- Bargraph Alarm Setpoint Markings
- High Intensity, Long Life LED Backlighting

Field Adjustable using English-Language Menus
- Inputs: 4-20 mADC, Thermistor, J or K Thermocouple
- 4-20 mADC Input and 4-20 mADC Output Scaling
- Bargraph Scaling
- Alarm Modes, Setpoints, Deadbands, and Time Delays

Dual SPDT Relays
- Configurable: HI-HI, HI, LO, LO-LO, Manual Reset
- 10 A resistive, 8 FLA, ½ HP, 120 VAC

NEMA 4 Front Panel

Flexible Communications for Data Logging
- 4-20 mADC Re-transmission
- RS485 Modbus Interface

JC-10D Process Indicator and Alarm Monitor (shown in Alarm Mode with reset pushbutton)

Description

The **JC-10D Process Indicator** is a microprocessor-based Indicator/Alarm that can be field configured for a wide variety of applications.The instrument provides a highly visible backlit LCD display with easy to understand bargraph, scaled numeric display, and front panel Alarm messages. Bargraph Scaling, Alarm Setpoints, and Time Delays are all field selectable. Adjustments are made directly from the faceplate of the instrument by scrolling through a user friendly, English language menu. The unit is constructed of a rugged polymer housing with a gasketed NEMA 4 faceplate.

Typical Applications:

Boiler Draft
Boiler Drum Level
Tank Levels
Flow Rates
Pressures
Temperatures

Note:

Any process condition that outputs a signal compatible with the **JC-10D** can be directed to this assembly.

PROCESS BARGRAPH INDICATOR AND ALARM MONITOR

Model JC-10D

Versatile

Field selectable input types: 2 or 4 wire 4-20 mADC, 10k Thermistor, J or K Thermocouple, Potentiometer, 0-2.5 VDC, or Pulser. Thermistors and Thermocouples are linearized and cold junction compensated.The numeric display can be scaled to any desired range from the front panel. The bargraph range and scaling can be set independently from the input scaling. The 4-20 mADC re-transmission output can be scaled independently as well.

Alarm Sequences

The two (2) alarms can be configured as HI-HI, HI, LO, or LO-LO alarms with individually adjustable deadbands and Time Delays. Alarm adjustment is done in scaled engineering units, not percentages. The two (2) relay outputs can be assigned as to an alarm or as a Common Alarm Output with Alarm Silencing logic. Each relay can be configured as auto-reset or manual-reset.

Suggested Specifications

Provide a remote reading, microprocessor-based Process Indicator and Alarm System to monitor [specify required monitoring point such as boiler draft, drum level, tank level, flow or pressure…]. The instrument shall provide a continuous numeric and 4", 0.5% resolution (minimum) bargraph display. The instrument shall contain: dual adjustment alarm setpoints with 10 A relay outputs, unique messages and manual reset pushbutton. The Instrument shall be field selectable as 2 or 4 wire 4-20 mADC, 10k Thermistor, J or K Thermocouple, Potentiometer, 0-2.5 VDC, or Pulser. The Instrument shall provide cold junction, and upscale thermocouple break protection for thermocouples, 4-20 mADC and RS485 Modbus remote output signals. The housing shall be panel mountable, fully gasketed with a NEMA 4 front face. All adjustments shall be made from the front panel display in engineering units. No external configurator or laptop shall be required. The Instrument shall be manufactured and labeled in accordance with UL508 requirements (CSA C22.2 #14 for use in Canada). Inspection and labeling shall be supervised by UL or other OSHA approved Nationally Recognized Test Lab (NRTL). Indicator and Alarm System shall be Preferred Instruments, Danbury, CT, **Model JC-10D**.

Specifications

Panel

Power Supply:	120VAC, +/- 15%, 50/60Hz, 15 VA
Case Size:	8" H x 3.5" W x 7.5" D
Enclosure Type:	NEMA 4 faceplate
Ambient Temp.:	+32° to 122° F
Displays:	High Contrast LCD Display 4" high, 0.5% Resolution Bargraph
Alarm Setpoints:	Two (2) adjustable with adjustable time delays HI-HI, H, L, LO-LO modes Manual Reset & Alarm Silence modes

Inputs

Input Types:	Field selectable 4-20 mADC, 100 ohm load Thermistor, -20° to +300° F Type J Thermocouple, 0°-1000° F TYpe K Thermocouple, 0°-2000° F Potentiometer, 100 ohm to 10 Kohm 0-5 VDC
Accuracy:	0.005% Resolution 0.07% Accuracy
Sensor Power:	24 VDC @ 100 mA 15 VDC @ 50 mA 2.5 VDC @ 12 mA

Outputs

Relay:	Two SPDT Relays 10 A resistive, 8 FLA, ½ HP, 120 VAC
Retransmit:	4-20 mADC, 650 ohm load maximum
Network:	1200 - 38400 Baud; RS485 Modbus, ASCII or RTU

Ordering Information
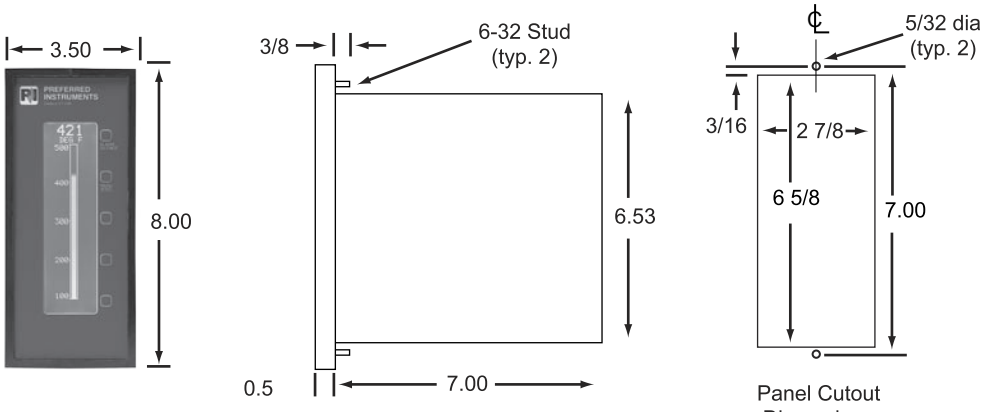
1. **JC-10D** Instrument